The 2012 World Congress on
Advances in Civil, Environmental, and Materials Research (ACEM' 12)
Seoul, Korea, August 26-30, 2012

Damage Identification of Bridges using Traffic-induced Vibration Data

Mitsuo Kawatani[1)], Chul-Woo KIM[2)] , *Hiromasa Doi[3)]
and Tatsuaki Toshinami[4)]

[1), 3)] *Department of Civil Engineering, Kobe University, Kobe, Japan*
[2)] *Department of Civil Engineering, Kyoto University, Kyoto, Japan*
[4)] *Shimizu Corporation, Japan*

[1)] *m-kawa@kobe-u.ac.jp*, [2)]*kim.chulwoo.5u@kyoto-u.ac.jp*

ABSTRACT

In this study feasibility of bridge health monitoring (BHM) using traffic-induced vibration data is investigated through a moving vehicle laboratory experiment of a scaled steel bridge model. The bridge health condition is estimated from the change in element stiffness by means of a pseudo-static approach. The element stiffness index (ESI), which indicates the ratio of damaged flexural rigidity of the element of a beam to undamaged one, is adopted as the indicator of the location and severity of damages in bridges.

The acceleration and displacement of the bridge and the acceleration of the vehicle are measured and utilized in the damage identification. Observations through the study demonstrate that locations and severities of damage are detectable using the proposed method.

1. INTRODUCTION

The potential economic and life-safety implications of early diagnosis investigation in structures have motivated a considerable amount of researches into structural health monitoring. Structures in many engineering fields are examined through periodic monitoring with the intention of minimizing the safety risk on the one hand and lowering maintenance costs to the greatest extent on the other hand by carrying out rehabilitation at appropriate times (Wenzel & Pichler 2005). For countries located in earthquake-prone regions, after earthquakes, structural health monitoring is useful for rapid condition screening. It is also intended to provide rapid and reliable information

[1), 2)] Professor
[3)] Graduate Student

related to structural integrity.

Usually, to define damage for bridge structures is difficult differently from other structures such as automobiles, aerial vehicles, etc. This is one reason why most precedent studies particularly addressing bridge health monitoring has specifically examined global change of modal properties and quantities of bridge structures. The fundamental concept of this technology is that a change in physical properties, such as reduced stiffness resulting from damage, will change these modal properties detectably (Rizos et al.1990, Salawu 1997, Shifrin & Ruotolo 1999).

For bridges with long span length, wind-induced vibrations are important dynamic sources. Even seismic records have been used for investigating system identification of a cable-stayed bridge (Siringoringo & Fujino 2006). On the other hand, for short span bridges, which are insensitive (or sometimes impassive) to the wind load, normal traffic excitations are important dynamic sources. However, traffic-induced vibration is a kind of nonstationary process that strengthens with decreasing span length. This study is an attempt to use excitations from a specified vehicle such as an inspection car as a dynamic source for BHM because a moving vehicle can provide benefits such as ready excitement of the bridge. This paper investigates feasibility of the damage identification method derived from the bridge-vehicle interactive system (Kim and Kawatani 2008) through a moving vehicle laboratory experiment of a scaled steel bridge model.

2. DAMAGE IDENTIFICATION METHODOLOGY

2.1 Equations of Motion for Bridge-Vehicle Interactive System

The compact matrix formation of the interactive system is obtainable as (Kim et al., 2005).

$$\begin{bmatrix} \mathbf{M}_{br} & \mathbf{0} \\ \mathbf{0} & \mathbf{M}_{vv} \end{bmatrix} \begin{Bmatrix} \ddot{\mathbf{q}}_r(t) \\ \ddot{\mathbf{q}}_v(t) \end{Bmatrix} + \begin{bmatrix} \mathbf{C}_{br} + \mathbf{C}_{cvb}(t) & \mathbf{C}_{bv}(t) \\ \mathbf{C}_{vb}(t) & \mathbf{C}_{vv} \end{bmatrix} \begin{Bmatrix} \dot{\mathbf{q}}_r(t) \\ \dot{\mathbf{q}}_v(t) \end{Bmatrix} + \begin{bmatrix} \mathbf{K}_{br} + \mathbf{K}_{cvb}(t) & \mathbf{K}_{bv}(t) \\ \mathbf{K}_{vb}(t) & \mathbf{K}_{vv} \end{bmatrix} \begin{Bmatrix} \mathbf{q}_r(t) \\ \mathbf{q}_v(t) \end{Bmatrix} = \begin{Bmatrix} \mathbf{f}_{bb}(t) \\ \mathbf{f}_{vv}(t) \end{Bmatrix} \quad (1)$$

Therein, $\mathbf{C}_{cvb}(t) \in \mathbb{R}^{nr \times nr}$ and $\mathbf{K}_{cvb}(t) \in \mathbb{R}^{nr \times nr}$ respectively denote the contribution of the moving vehicle's damping and stiffness to those of the bridge where nr is the DOFs of bridge system. Furthermore, $\mathbf{C}_{bv}(t) \in \mathbb{R}^{nr \times nv}$ and $\mathbf{K}_{bv}(t) \in \mathbb{R}^{nr \times nv}$ are the coupled damping and stiffness matrices between the bridge and vehicle systems, where nv denotes the DOFs of the vehicle model. The respective mass, damping, and stiffness matrices for the vehicle are $\mathbf{M}_{vv} \in \mathbb{R}^{nv \times nv}$, $\mathbf{C}_{vv} \in \mathbb{R}^{nv \times nv}$ and $\mathbf{K}_{vv} \in \mathbb{R}^{nv \times nv}$. $\mathbf{q}_r(t)$ and $\mathbf{q}_v(t)$ denote dynamic responses of bridge and vehicle, respectively. In addition, $\mathbf{f}_{bb}(t) \in \mathbb{R}^{nr}$ and $\mathbf{f}_{vv}(t) \in \mathbb{R}^{nv}$ respectively signify external force vectors of the bridge and vehicle.

A noteworthy point in Eq. (1) is that the system damping and stiffness matrices consist of time-variant coefficients. Consequently, the conventional frequency domain approaches are not directly relevant to identify damage in the bridge-vehicle interactive system, especially for short span bridges which contribute a great portion of bridge structures and are more easily affected by traffic loading than long span bridges.

2.2 Methodology for Drive-by Damage Identification

The concept for the damage identification described in this paper is based on the fact that the stiffness distribution in the structure is induced to change as a result of damage. This change is detectable by measuring dynamic responses under an inspection car whose dynamic wheel loads or dynamic properties are known. To simplify the problem, the mass matrix of a bridge is assumed to be unaffected by damage. The damping matrix is affected by the change of stiffness because this study assumes Rayleigh damping for the bridge structure. Another assumption is that parameters of the intact bridge and vehicle model are estimated initially.

Subtracting linear equations for stiffness of a bridge from Eq. (1) of the bridge-vehicle interactive system yields Eq. (2) of a pseudo-static formulation to show the change of a bridge structure's stiffness.

$$\mathbf{K}_{br}\mathbf{q}_r(t) = \mathbf{f}(t),\ \mathbf{f}(t) \in \mathbb{R}^{nr} \tag{2}$$

In that equation, the force vector is definable as

$$\mathbf{f}(t) = \mathbf{f}_{b1}(t) - \mathbf{f}_{b2}(t)\,, \tag{3}$$

where $\mathbf{f}_{b1}(\mathrm{t})$ is the distributed dynamic wheel load at each node of on FE model and is directly measurable from the inspection car. $\mathbf{f}_{b2}$ (t) is the contribution of inertia and dissipation forces of the bridge.

The change of stiffness $\mathbf{K}_{br}$ in Eq. (2) provides information about the change of the bridge's health condition. Detection of the change in $\mathbf{K}_{br}$ is the basic concept of the damage identification methodology proposed in this paper. The reduced structural stiffness matrix $\mathbf{K}_{br}$ is obtainable using the assembly operator L_e as

$$\mathbf{K}_{br} = \sum_{e=1}^{M} \mathbf{L}_e^T \mathbf{K}_{be}^g \mathbf{L}_e\ . \tag{4}$$

Therein, M is the number of elements; $\mathbf{L}_e \in \mathbb{R}^{2nf\times n}$ provides the assembly operator of an element that transforms the element stiffness matrix to a structural stiffness matrix in which nf denotes the number of DOFs at an element node. $\mathbf{K}_{be}^g \in \mathbb{R}^{2nf\times 2nf}$ is an element stiffness matrix in the global coordinate given by Eq. (5).

$$\mathbf{K}_{be}^g = \mathbf{R}_e^T \mathbf{K}_{be}^i \mathbf{R}_e \tag{5}$$

In that equation, $\mathbf{K}_{be}^i \in \mathbb{R}^{2nf\times 2nf}$ is the element stiffness matrix of the intact state. In addition, $\mathbf{R}_e \in \mathbb{R}^{2nf\times 2nf}$ denotes the coordinate transformation matrix.

The change of the element stiffness is obtainable using the element stiffness index (ESI), which is defined as

$$\mu_e = \frac{\mathbf{K}_{be}^d}{\mathbf{K}_{be}^i} = \frac{(E_e I_e)^d}{(E_e I_e)^i}\,, \tag{6}$$

$$\mathbf{K}_{be}^d = \mu_e \cdot \mathbf{K}_{be}^i\,, \tag{7}$$

where μ_e is the element stiffness index, and $(E_e I_e)^i$ denotes the bending rigidity of the e-th element of an intact state.

Introducing the relation in Eq. (7) into $\mathbf{K}_{be}^{g}$ of Eq. (5), then Eq. (4) of the structural stiffness matrix for a bridge can be rewritten for a damaged bridge as

$$\mathbf{K}_{br} = \sum_{e=1}^{M} \mu_e \mathbf{L}_e^T \mathbf{K}_{be}^{g} \mathbf{L}_e \ . \tag{8}$$

A noteworthy point is that the ESI value is unity for an intact bridge, meaning that the value of unity for μ_e ($e = 1, \ldots, M$) is the reference value for this study.
Substituting the relation in Eq. (8) into Eq. (2) of the pseudo-static formulation yields

$$\sum_{e=1}^{M} \mu_e \mathbf{h}_e(t) = \mathbf{f}(t) \ , \tag{9}$$

where $\mathbf{h}_e(t) \in \mathbb{R}^{nr}$ is a coefficient vector of the e-th element at time t. It is defined as

$$\mathbf{h}_e(t) = \left(\mathbf{L}_e^T \mathbf{K}_{be}^{g} \mathbf{L}_e\right) \mathbf{q}_r(t) \ . \tag{10}$$

If $\mathbf{x} \in \mathbb{R}^m$ gives the vector of ESI of a bridge, which is definable as Eq. (11) and $\mathbf{H}(t) \in \mathbb{R}^{nr \times m}$ is a coefficient matrix of a bridge model at time t defined as Eq. (12), then Eq. (9) can be condensed as a matrix formation of Eq. (13).

$$\mathbf{x} = \{\mu_1; \quad \mu_2; \quad \cdots \quad \mu_{m-1}; \quad \mu_m\} \tag{11}$$

$$\mathbf{H}(t) = \{\mathbf{h}_1(t) \quad \mathbf{h}_2(t) \quad \cdots \quad \mathbf{h}_{m-1}(t) \quad \mathbf{h}_m(t)\} \tag{12}$$

$$\mathbf{H}(t)\mathbf{x} = \mathbf{f}(t) \tag{13}$$

If a moving vehicle experiment is carried out and measured data of mt samples are available in damage identification, then Eq. (13) can be written simply as

$$\mathbf{A}\mathbf{x} = \mathbf{b} \ , \tag{14}$$

Equation (14), which shows the formulation in the form of a linear system of equations subtracted from equations of motion for the bridge-vehicle interaction, is used for damage identification of bridges. Usually, the set of simultaneous equations in Eq. (14) polluted by noise, and inverse problems are often ill-posed. The Tikhonov regularization (Tikhonov and Arsenin 1977) as a RLS minimization is used to solve the inverse problem of the noisy system as

$$\min \left\{ \|\mathbf{A}\mathbf{x} - \mathbf{b}\|_2 - \lambda \|\mathbf{x} - \mathbf{x}_0\|_2 \right\} \ \mathbf{A} \in \mathbb{R}^{nq \times m}, \ \lambda \in [0, \infty]. \tag{15}$$

Therein the first term is the same as that of the ordinary least-squares (OLS) minimization. The second term is the side constraint, which stabilizes the problem and singles out a useful and stable solution. The regularization parameter λ controls the weight given to minimization of the side constraint relative to minimization of the

residual norm (Tikhonov and Arsenin 1977). The L-curve method (Hansen 1994) is used for this study to choose the optimal regularization parameter. The vector $\mathbf{x}_0$ is the *a priori* estimate. A unit vector is adopted as the *a priori* because the ESI value of the intact bridge is equal to the unit value.

The health condition of bridge structures is detectable directly from investigating the ESI vector $\mathbf{x}$. Determination of the ESI vector can also provide information related to damage location and severity.

3. LABORATORY EXPERIMENT SETUP

Feasibility of the method for the bridge health-condition assessment is investigated through a moving vehicle laboratory experiment. A scaled bridge model is adopted as an experimental girder.

The experiment setup is shown in Fig. 1 with geometry of the girder model and a scale roadway surface profile. Details of the structural properties of the girder are also presented in Fig. 1. Damage scenario is shown in Fig. 2. The damage is given to the bridge by severing the flanges between 3L/8-L/2. Damage scenarios 1, 2 and 3 cause 6%, 20% and 35% decrease of the bending rigidity of the bridge, respectively.

Natural frequencies and damping constants of the bridge model taken from free vibration experiments, and decrease of the bending rigidity are presented in Table 1. Damping constants are estimated from the free vibration time histories after the vehicle leaving the bridge model because of their dependence on the amplitude. Those three fundamental frequencies of 2.66 Hz, 10.6 Hz, and 23.8 Hz correspond respectively to the first, second, and third bending modes of the intact bridge model used in the experiment. Three different model vehicles are considered during the experiment. Scenarios of laboratory moving vehicle test are shown in Table 2. Two different vehicle masses, 21.6 kg and 25.8 kg, are used. The natural frequencies of the vehicle model are respectively 2.93 Hz and 3.71 Hz for the bounce motion. Three different speeds are also adopted to investigate the effect of the vehicle speed to damage identification accuracy.

Three points of 1/4, 1/2, and 3/4 of the span length and two points of front and rear axle of the vehicle are observation points. The sampling rate is 100 Hz. Regarding the vehicle speed, three different speeds, 0.93 m/s, 1.16 m/s and 1.63 m/s, which give speed parameters of 0.0327, 0.0404 and 0.0567 according to Eq. (16), respectively, are used. They are similar to the speed parameters of 0.0299, 0.0439 and 0.0598 estimated using vehicle speeds around 21 km/h, 28 km/h and 38 km/h of an actual bridge with span length of 40.4m and the first bending mode of 2.35Hz.

$$\alpha = v/(2 \cdot f \cdot l_b) \tag{16}$$

In Eq. (16), α is the speed parameter; v denotes vehicle speed (m/s); f indicates the first fundamental frequency for the bending mode; and l_b is the bridge span length (m).

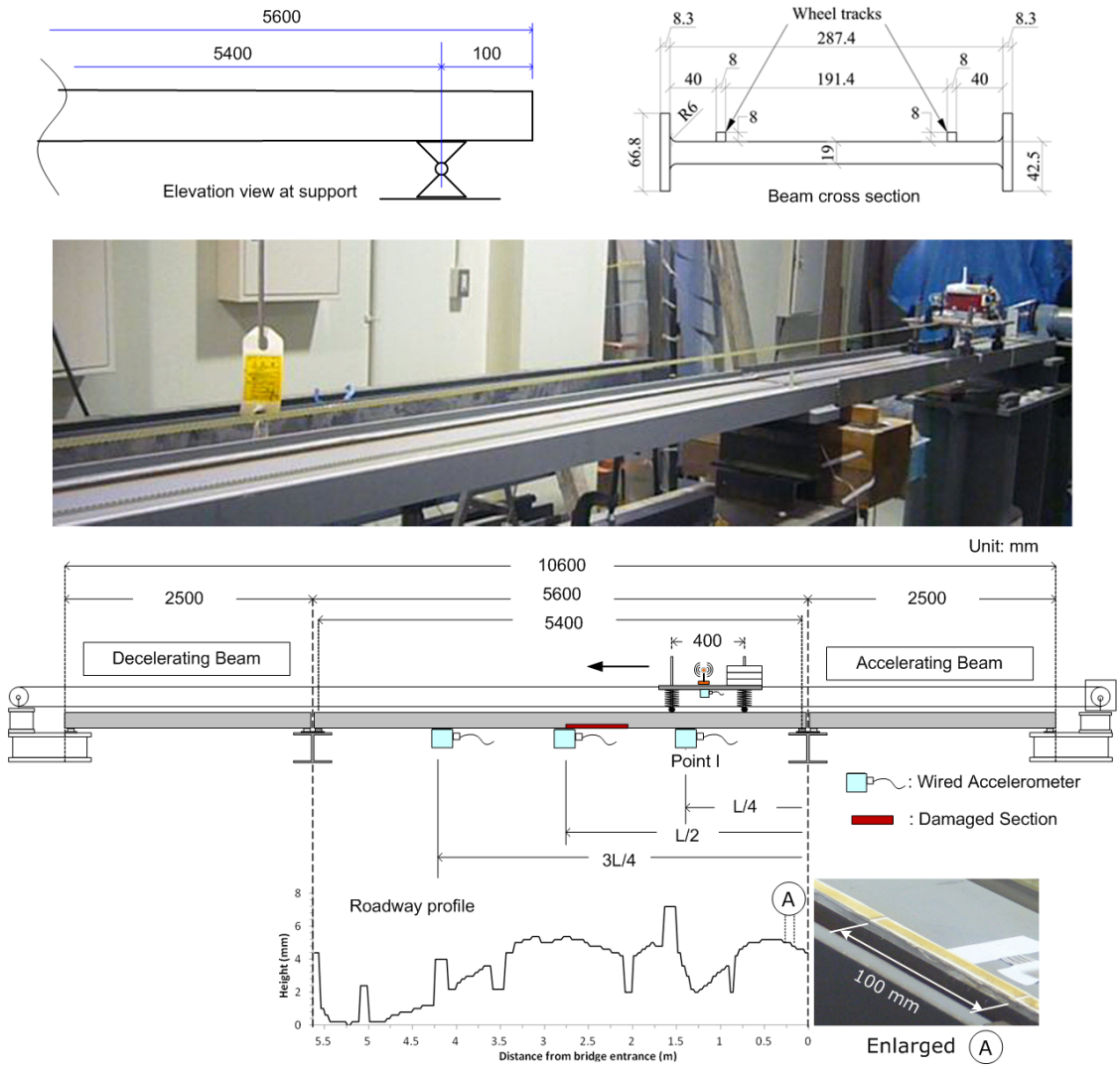

Fig. 1 Experiment setup

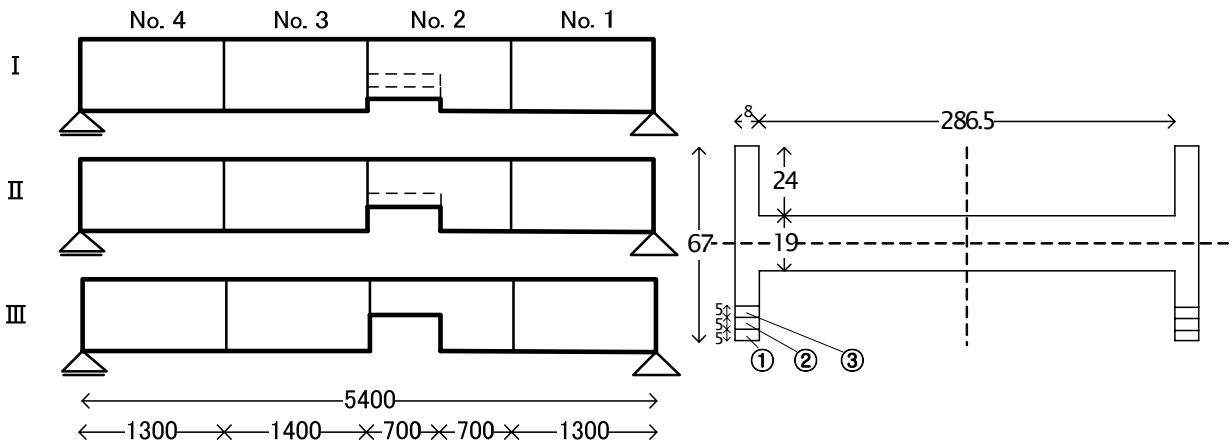

Fig. 2 Damage scenario

Table 1 Natural frequencies and damping constants of bridge model

		Intact	Damage Ⅰ	Damage Ⅱ	Damage Ⅲ
Natural frequencies (Hz)	1st	2.65	2.62	2.57	2.51
	2nd	10.6	10.5	10.3	10.1
	3rd	23.8	23.3	23	22.6
damping constants	1st	0.008	0.011	0.013	0.008
decrease of the bending rigidity(%)		-	6	20	35

Table 2 Scenarios of laboratory moving vehicle test

Scenario	Vehicle type	Speed
Scenario1	V1(M=21.6kg, f=2.93Hz)	S1=0.93m/s
Scenario2	V1(M=21.6kg, f=2.93Hz)	S2=1.16m/s
Scenario3	V1(M=21.6kg, f=2.93Hz)	S3=1.63m/s
Scenario4	V2(M=21.6kg, f=3.71Hz)	S1=0.93m/s
Scenario5	V2(M=21.6kg, f=3.71Hz)	S2=1.16m/s
Scenario6	V2(M=21.6kg, f=3.71Hz)	S3=1.63m/s
Scenario7	V3(M=25.8kg, f=2.93Hz)	S1=0.93m/s
Scenario8	V3(M=25.8kg, f=2.93Hz)	S2=1.16m/s
Scenario9	V3(M=25.8kg, f=2.93Hz)	S3=1.63m/s

4. EXPERIMENTAL RESULTS

4.1 Dynamic Responses from Experiment

Examples of time histories of acceleration and displacement of the bridge at three points of the span length and those of acceleration of each axle of the vehicle and their Fourier amplitude spectra intact and damage 1 are shown in Figs. 3 and 4, respectively. Natural frequencies and damping constants are changed due to the damage. Additional peaks round 9Hz of dominant frequencies due to the damage in comparison with those of the intact bridge are observed. Another interesting point is that dominant frequencies near 23.3Hz are moved to 23.1Hz due to the damage.

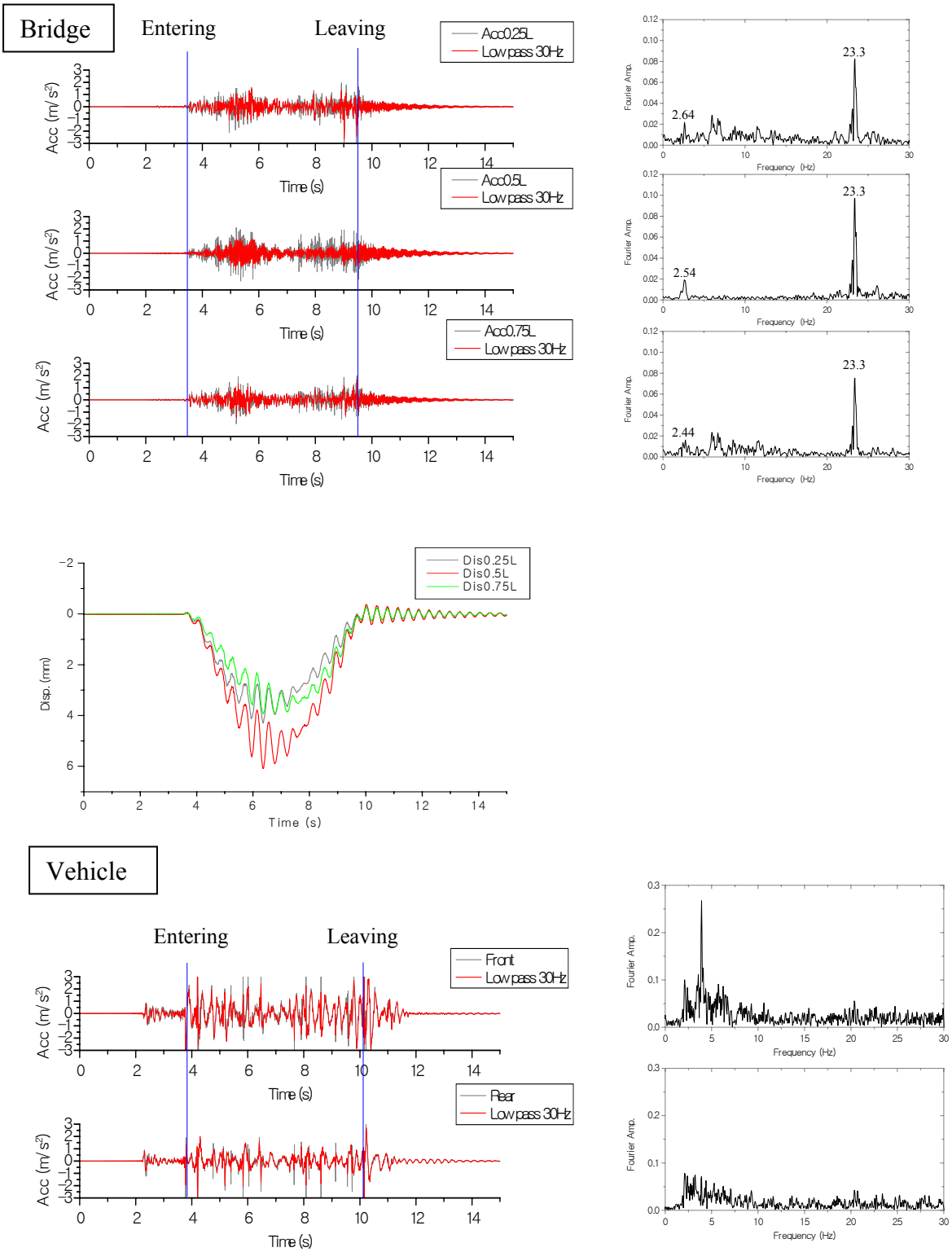

Fig. 3 Dynamic responses of intact bridge under vehicle

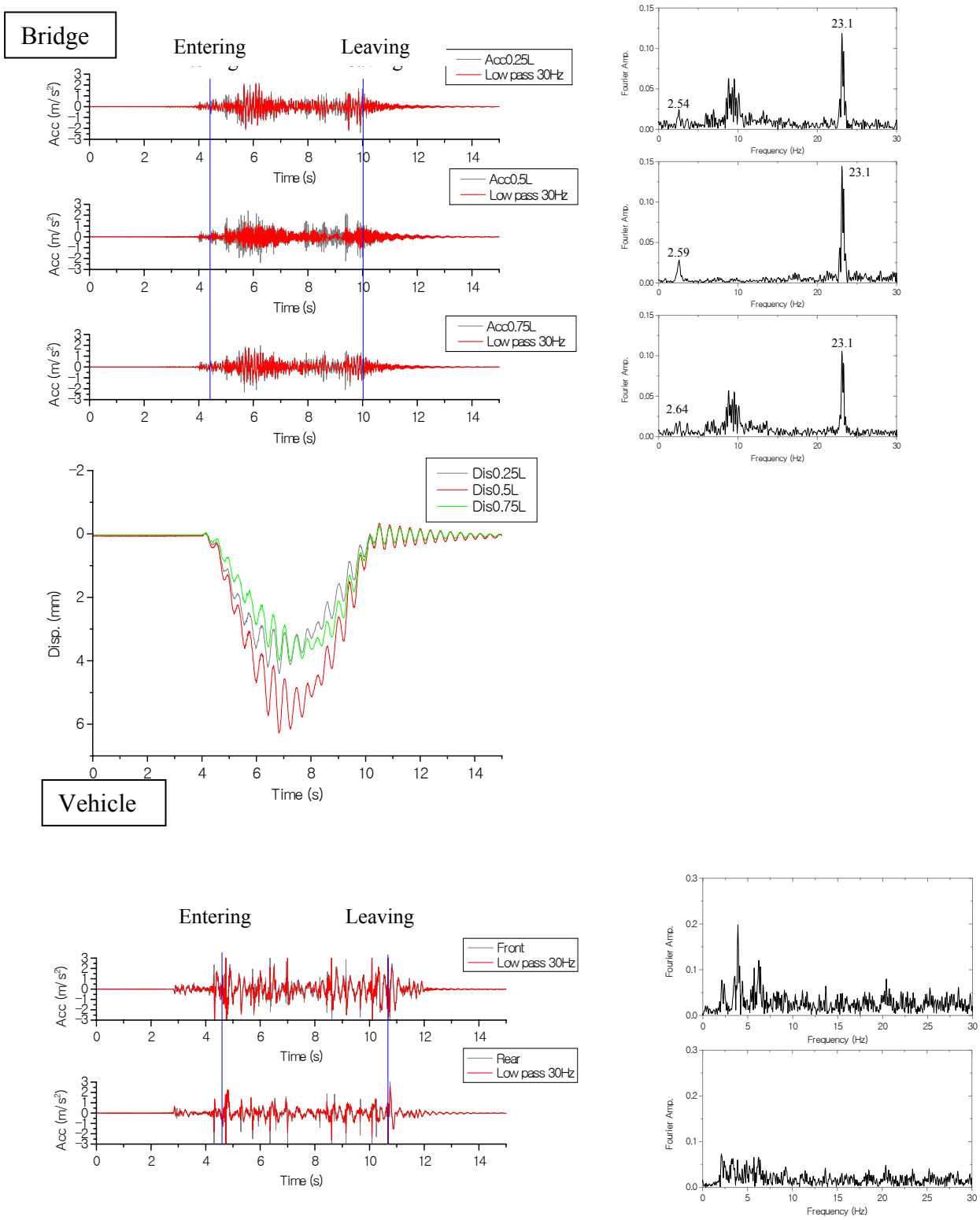

Fig. 4 Dynamic responses of damage bridge under vehicle

4.2 Damage Identification

The damage identification result is summarized as the mean values for nine scenarios of vehicle models in Fig. 5, which demonstrates that the damage location (element No.2) is well identified by the proposed method. Furthermore, severity of damage is also detectable.The identified result of decreasing ESI values of the members near the damaged member is natural because the response of undamaged members near the damaged member is also affected by damage because of the actual beam's continuity. Observations from the experimental investigation demonstrate the feasibility of the method for use with real world problems.

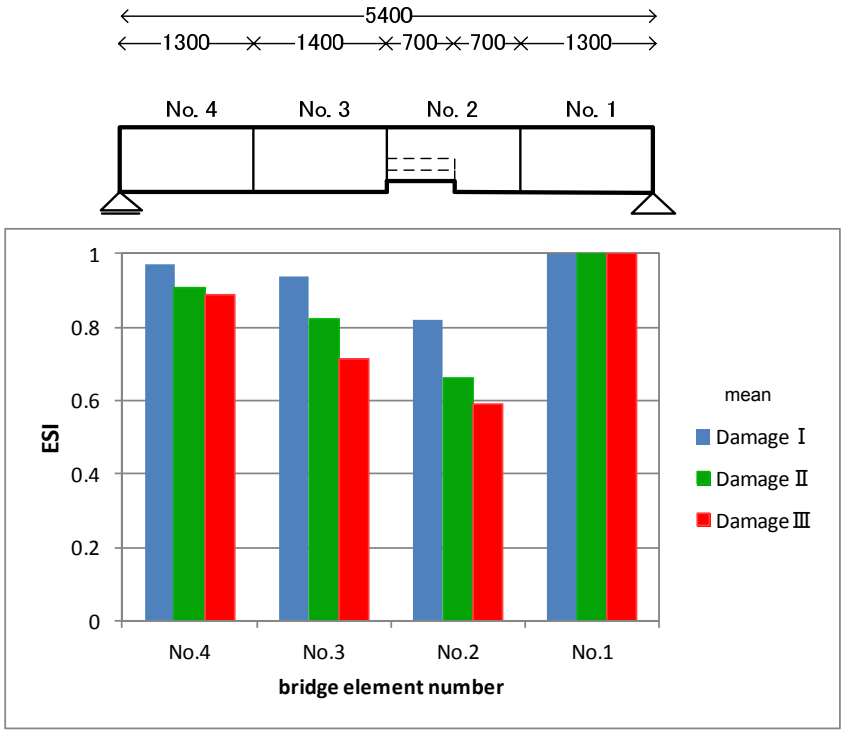

Fig. 5 Identified damage location and severity

5. CONCLUSIONS

In the present study, feasibility of the proposed method is examined by using the kinetic response of the bridge by the running vehicle. The location and severity of damage in the model bridge are detectable. The next step for this study is to investigate applicability of the method to damage detection of real bridges.

REFERENCES

Hansen, P.C. (1994) Regularization tools, *A Matlab package for analysis and solution of discrete ill-posed problems*, Numerical Algorithms, Vol.**6**, 1-35.

Kim, C.W., Kawatani, M. and Kim, K.B. (2005) “Three-dimensional dynamic analysis for bridge-vehicle interaction with roadway roughness”, *Computer and Structures*, Vol.**83**, 1627-1645.

Kim, C.W. and Kawatani, M. (2008) “Pseudo-static approach for damage identification based on coupling vibration with a moving vehicle”, *Structure and Infrastructure Engineering*, Vol.**4**, No.5, 371-379.

Rizos, P.F., Aspragatos, N. and Dimarogonas, A.D. (1990) “Identification of crack location and magnitude in a cantilever beam from the vibration modes”. *J Sound Vibr*, Vol.**138**, 381-388.

Salawu, O.S. (1997) “Detection of structural damage through changes in frequency”, *Eng Struct*, Vol.**19**, 718-723.

Shifrin, E.I. and Ruotolo, R. (1999) “Natural frequencies of a beam with an arbitrary number of cracks”. *J Sound Vibr*, 222, 409-423.

Siringoringo, D.M. and Fujino, Y. (2006) “Observed dynamic performance of the Yokohama Bay Bridge from system identification using seismic records”, *Structural Control and Health Monitoring*, Vol.**13**, 226-244.

Tikhonov, A.V. and Arsenin, V.Y. (1977) *Solutions of Ill-posed Problems*, Wiley, New York.

Wenzel, H. and Pichler, D. (2005) *Ambient Vibration Monitoring*, John Wiley & Sons.