The 2016 World Congress on
The 2016 Structures Congress (Structures16)
Jeju Island, Korea, August 28-September 1, 2016

Shear Behavior of RC Column-to-Steel Beam Joints

*Ho-Jun Lee[1)], Hong-Gun Park[2)], Chang-Soo Kim[3)] and Hyeon-Jong Hwang[4)]

[1), 2)] *Department of Architecture and Architectural Engineering, Seoul National University, Seoul 151-744, Korea*
[3)] *School of Civil Engineering, Shandong Jianzhu University, Shandong 250-101, China*
[4)] *College of Civil Engineering, Hunan University, Hunan 410-082, China*
[1)] *hojun1032@gmail.com*

ABSTRACT

RC column-to-steel beam (RCS) joint is one of the most popular hybrid structural systems in building constructions. Among typical joint failure modes of panel shear and concrete bearing, the shear failure mode is investigated in this study. The joint shear behavior is generally described with the shear mechanism of inner and outer panels. However, test results reveal that the joint shear strength is also affected by concrete spalling in the bearing region. In this paper, the results of cyclic load testing for large-scale RCS joints are presented, where both yielding of joint shear and beam flexure took place. Flange plastic hinges triggered premature damage in the bearing region, causing degradation of the joint shear capacity. The test results are evaluated based on existing design models and a new insight into the shear behavior of RCS joints is highlighted.

1. INTRODUCTION

The reinforced concrete column-steel beam (RCS) moment resisting frame is one of the most popular hybrid structural systems in building constructions. A number of experimental studies were undertaken to investigate the structural characteristics of RCS joints. In the very early researches (Deierlein 1988; Sheikh 1988; Kanno 1993), the experimental programs were focused on evaluating inelastic behavior of beam-column joints in terms of connection strength and deformation. To induce the connection failure, strong steel beam sections or thick flanges were used in the test specimens. In later experiments (Bugeja et al. 2000; Parra-Montesinos et al. 2003; Liang and Parra-Montesinos 2004; Cheng and Chen 2005; Alizadeh et al. 2015), research objective was to verify structural safety of RCS moment frames under high seismicity. Thus, the connections were sufficiently reinforced so that yielding was concentrated at beam plastic hinges. On the other hand, the previous studies were seldom concerned with the interaction between joint and beam failures.

The current study investigated the shear failure mode of RCS joints accompanied by beam flexural yielding. Simple and common strengthening details such as face bearing plates (FBPs), transverse beams, and headed studs were considered as test parameters. Based on cyclic load testing for large-scale interior beam-column joints, failure modes and load-carrying capacity were investigated.

2. TEST PROGRAM

Joint specimens was 2/3 scale of a prototype joint with column cross-sectional dimensions of 800×800 (mm). For steel beams, build-up section of H-600×240×12×20 (mm) was utilized. The moment capacity ratio of column to beam was 1.6 (based on actual material strengths), so that the failure of column is restrained. In real constructions, it is desirable to secure greater strength of joint than that of beams, thus inducing the beam flexural yielding. However, in the current experiment, the joint shear capacity was designed to be comparable to the beam flexural capacity to investigate the interaction effects. The joint strengths were estimated based on existing design models (ASCE 1994; AIJ 2001; Kanno and Deierlein 2002).

Fig. 1 shows test parameters of joint specimens. The main parameters were the use of transverse beams and headed studs, and FBP thickness. The FBP thickness of 16 mm satisfies the requirement of ASCE guidelines (ASCE 1994). In specimens TF6 and TF16, 6 and 16 mm-thick FBPs were used, respectively. Both specimens were also strengthened with transverse beams. In specimen SF6, headed studs and 6 mm-thick FBPs were used. On the other hand, FBPs (thickness = 16 mm) were used in F16 without either of transverse beams and headed studs.

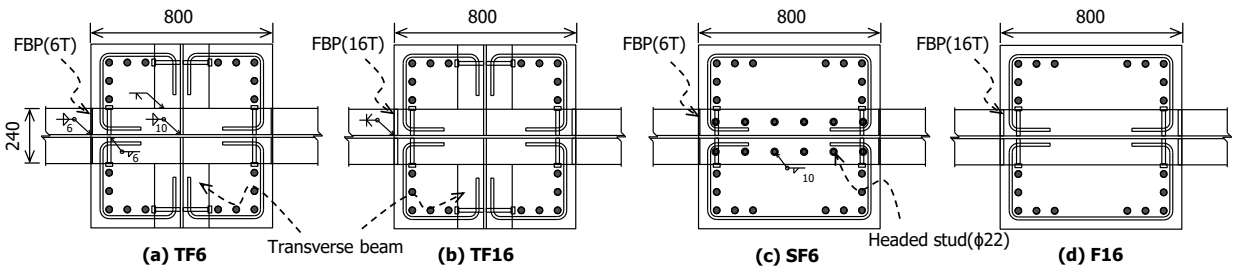

Fig. 1 Connection details of RCS joint specimens

In the ASCE guidelines, three layers of lateral ties are required in the region of 0.4*d* (where *d* = beam depth) above and below the beam flanges. This regulation is to protect the highly stressed bearing region and to support the strut-and-tie action in the compression field. In the present study, U-cross ties were used instead of conventional cross-ties to effectively confine the vulnerable bearing region. The legs of U-cross ties were designed to be valid in tensile force, satisfying the B-grade lap splice. Inside the joint with transverse beams, small ties were arranged in four corners. For continuity of corner ties and simple construction, studs were welded to the beam webs. The tie spacing inside the joint was 200 mm which was the same as the column tie spacing.

The vertical length of column between loading and reaction tips was 3,060 mm while the horizontal length between reactions was 6,760 mm (see Fig. 2). The loading of 6 cycles were applied in each drift ratio of 0.375%, 0.5%, and 0.75%. After 4 cycles in 1.0% drift ratio, 2 cycles were applied in each drift ratio of 1.5%, 2.0%, 3.0%, 4.0%, 5.0%, and 6.0%.

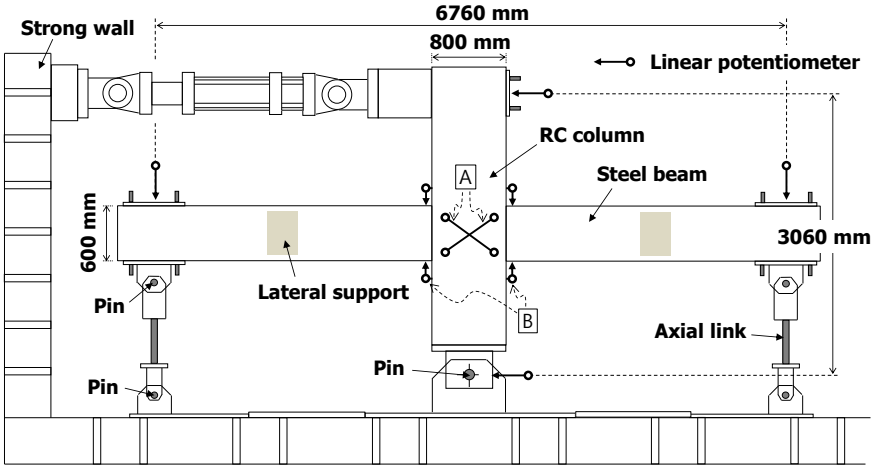

Fig. 2 Experimental set-up

3. TEST RESULTS

3.1 Failure modes

In the specimen TF6 with transverse beams and thin FBPs, joint diagonal cracking initiated at 0.75% drift ratio. The cracking developed separately in the regions divided by transverse beams. Beam flanges yielded at 1.5% drift ratio. At 2.0% drift ratio, the crushing of cover concrete initiated due to the vertical bearing. From this point, failure of outer panel was further facilitated with the rigid body rotation of inner panel. At 3.0% drift ratio, the diagonal crack width exceeded 1.0 mm and the cracks were propagated toward the column corner. The specimen exhibited the peak loads at 4.0 drift ratio when the joint panel was severely damaged (see Fig. 3(a)). The damage modes of TF16 with ordinary FBP thickness were similar to those of TF6. This indicates that the FBP thickness did not significantly affect the overall behavior of the current specimens since the transverse beams played a governing role in load transfer mechanism.

In SF6 and F16 without transverse beams, major diagonal cracking occurred across the middle of joint panel (see Fig. 3(c) and (d)). In SF6 with headed studs welded on beam flanges, diagonal cracks were observed at 1.0% drift ratio. At 2.0% drift ratio, cover spalling due to the vertical bearing occurred, and the joint diagonal crack width exceeded 1.0 mm. The concrete spalling near the beam flanges was the most serious in SF6, which was caused by the stud extraction when the beam flange is subjected to the tensile force.

In F16 only with the conventional FBP thickness, joint diagonal cracking initiated at 1.0% drift ratio. Local crushing of the cover concrete occurred at 1.5% drift ratio which was the earliest among the specimens. At 3.0% drift ratio, joint diagonal crack width became greater than 1.0 mm. When compared with other specimens, the failure of the outer joint panel was slowly developed. Instead, rigid-body rotation of the inner panel was conspicuous. This was because shear keys that mobilize the shear mechanism of the outer panel were absent.

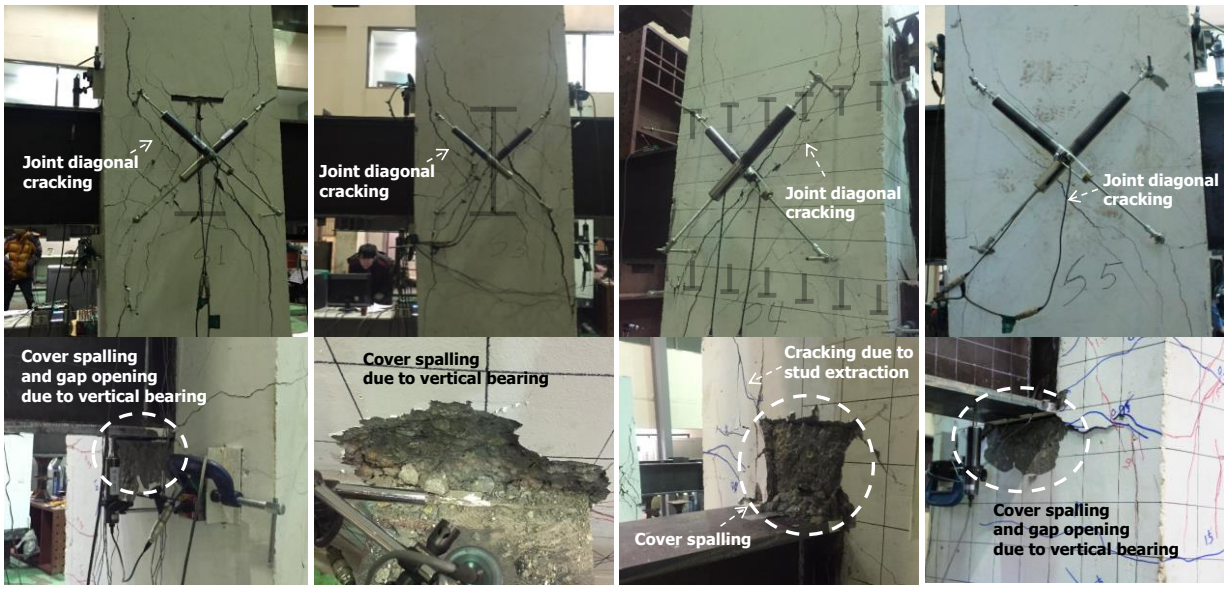

(a) TF6 **(b) TF16** **(c) SF6** **(d) F16**

Fig. 3 Damage modes at 4.0% drift ratio

3.2 Load-displacement relationships

Fig. 4 shows hysteresis responses of lateral load-story drift relationship. All specimens exhibited good deformation capacity of 4% (SF6) and 6% (other specimens). The influence of FBP thickness was not noticeable (see Fig. 4(a) and (b)). Joint specimens with transverse beams or headed studs exhibited enhanced strength by increasing shear contribution of the outer panel (V_{test}= 955, 1,040, 955, and 906 kN for TF6, TF16, SF6, and F16, respectively). On the other hand, in F16 without any shear keys, deformation capacity was the greatest (see Fig. 4(d)).

From the viewpoint of energy dissipation characteristics, difference between the specimens was not remarkable. All specimens showed typical hysteresis behavior of joint shear failure (AIJ 2001). The energy dissipation under cyclic loading was caused by not only yielding of joint web plate, but also that of beam flanges. The pinching of the hysteresis curves indicates the effects of concrete bearing failure and joint diagonal cracking.

Joint deformation can be divided into shear deformation and rigid-body rotation of the steel beam caused by bearing failure. By using measured shear distortion (see A in Fig. 2) and beam rotation (see B in Fig. 2), contribution of each deformation to lateral

displacement was evaluated. At 2.0% drift ratio, joint deformation contributed to 46%~50% of total displacement, and the ratio increased to 66%~75% at 4.0% drift ratio. The result indicates that most damages were concentrated in the joint.

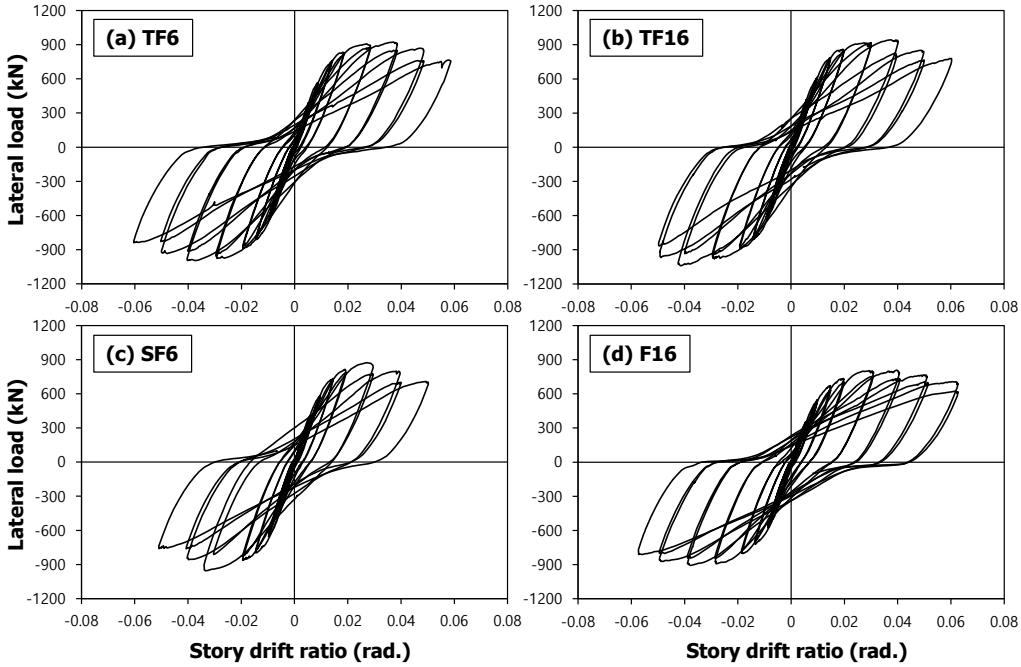

Fig. 4 Load-displacement relationships

4. STRENGTH EVALUATION

4.1 Existing design models

When compared with predicted load of beam flexural yielding (V_{bf}= 963 kN), the joint specimens exhibited 94%~108% of the prediction. Only the negative strength of TF16 satisfied the prediction. The results indicate that the beam plastic capacity, including the strain hardening effect, was not fully attained. Buckling did not occur in the beam and the joint region was more severely damaged.

The joint strengths of current specimens were evaluated based on existing design models (ASCE 1994; Kanno and Deierlein 2002). In ASCE guidelines, failure modes of RCS joints are divided into shear mechanism of the panel zone (see Fig. 5) and bearing mechanism of concrete above and below the steel beam. The joint capacity is chosen to be smaller of these strengths.

In the ASCE guidelines, strengths of joint specimens were all governed by the shear mechanism with safety margin against the bearing failure of 1.32. The test strengths exhibited 113%~129% of the predicted shear capacity, indicating that the guidelines are conservative. This is partly because the guidelines neglect the effects of transverse beams and headed studs. In all specimens, the predictions are exactly the same (V_{ASCE}= 804 kN).

Kanno and Deierlein (2002) divided the RCS joint into the inner element and outer element, and evaluated the joint capacity by summation of the two components. Failure mode of the inner element is either shear failure or bearing failure while failure mode of the outer element is either shear failure or bond failure. Therefore, K&D can define four combinations of joint failures.

As the ASCE guidelines, Kanno and Deierlein (K&D) predicted the shear failure modes for both inner and outer panels ($V_{K\&D}$= 1,177, 1,177, 1,156, and 986 kN for TF6, TF16, SF6, and F16, respectively). The safety margin against the bearing failure in the inner panel was 1.12. Although the predicted failure modes were the same in both design models, the predictions were greater in K&D. The joint specimens did not reach the design strengths with 81%~92% of the predictions. In the case of specimens TF16 and F16 with ordinary FBP thickness, the strength ratio was 88% and 92%, respectively.

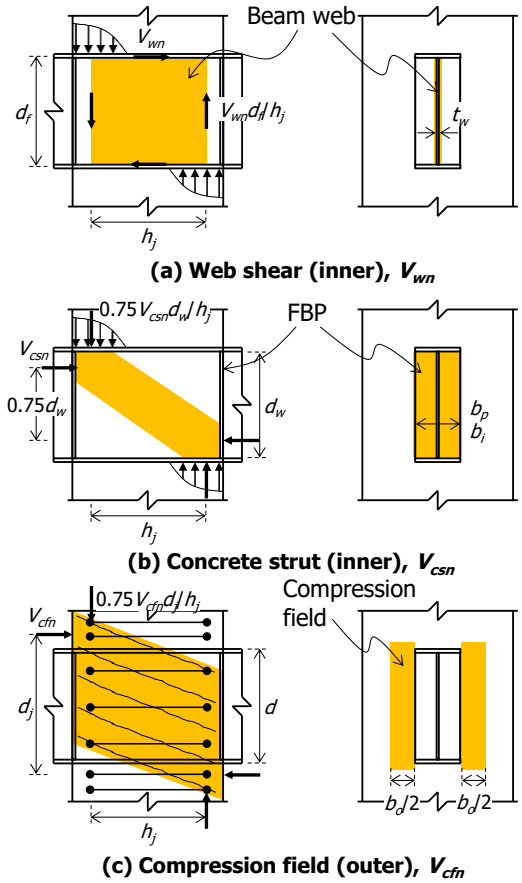

Fig. 5 Shear mechanism of RCS joint panel

4.2 Shear strength degradation

Since the ASCE model focused on the joint shear strength of selected specimens at 1.0% joint distortion, the predictions are generally known to be fairly conservative by roughly 20% when compared with the peak strength (Parra-Montesinos and Wight 2001; Kanno 2002). The current specimens outperformed the ASCE predictions by

13%~29%. However, considering the fact that the model neglected the beneficial effects of transverse beams and headed studs, the current specimens might underperformed their joint shear capacity. When compared with the predictions of K&D, which is known to be less conservative than ASCE predictions, the specimens clearly underperformed the predictions.

In existing design models, the joint capacity is evaluated by simple summation of resisting elements; the plastic strength of inner panel (AISC 2010; ACI-ASCE 2002) and the effective strength of outer panel. However, actual contributions of each resisting component are more complex. In early loading, since shear distortion is greater in the inner panel, it should carry a large part of joint shear demand while the contribution of the outer panel is limited. Nevertheless, after the cover spalling, diagonal crack width increased and tie reinforcements yielded, indicating that the contribution of the outer panel increased. In the total joint behavior, stiffness decreased due to the damage in the bearing region, and the joint peak load was attained when the resistance of the outer panel was the greatest.

The underperformed shear capacity of the joint specimens is related to the strength deterioration of the inner components. The fundamental cause for the degradation is the early spalling of cover concrete. In current specimens, the spalling was triggered by flange kinking due to the beam flexural yielding that initiated at 1.5% drift ratio, in addition to the panel web shear yielding (see Fig. 6).

According to the strain measurement, flange tensile strain inside the joint significantly increased after the cover spalling. This indicates that the potential beam plastic hinge penetrated inside the joint, which further affected the concrete spalling. The concrete spalling should decrease the effective arm length of panel web resistance. In addition, permanent elongation of the beam inside the joint should prevent formation of the inner concrete strut. Thus, the beam yielding and the subsequent concrete spalling cause significant strength degradation of the inner panel (see Fig. 6).

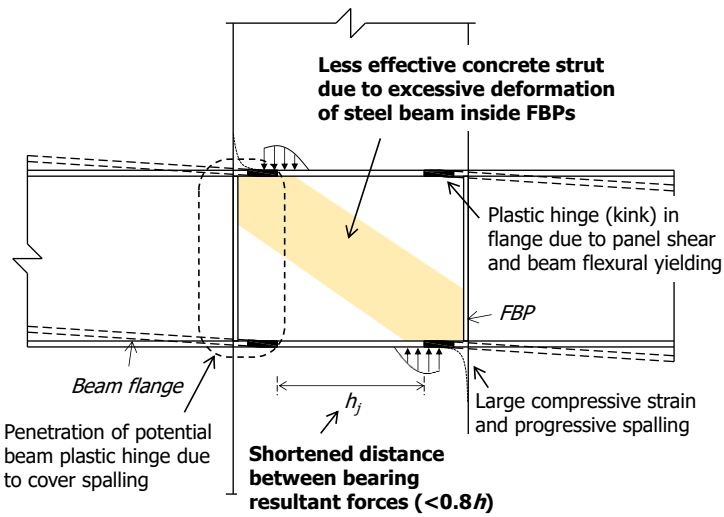

Fig. 6 Performance degradation of inner components

5. CONCLUSIONS

In the joint specimens, cover spalling due to the vertical bearing occurred in 1.5~2.0% drift ratio. Ultimately, the load-carrying capacity decreased due to the shear failure of the joint panel in 4.0~5.0% drift ratio. The thickness of the FBPs did not significantly affect the overall behavior of the current specimens since the transverse beams played a major role in the load transfer mechanism. Even though the transverse beams and the headed studs were effective in increasing the joint strength, the headed studs decreased the deformation capacity by triggering the further concrete spalling.

ASCE guidelines which neglect the effects of= transverse beams and headed studs gave conservative predictions for the joint strengths. On the other hand, the K&D model, addressing the effects of the shear keys, overestimated the test results. If RCS joints are susceptible to both joint shear and beam flexural failure, especially when the bearing strength is not sufficiently secured, the degradation of the joint capacity should occur.

REFERENCES

ACI-ASCE Committee 352 (2002), “Recommendations for design of beam-column connections in monolithic reinforced concrete structures,” *ACI 352R-02*, Farmington Hills, MI.

AIJ (Architectural Institute of Japan) (2001), “Design and construction of mixed structures composed of reinforced concrete columns and steel beams,” Tokyo (in Japanese).

AISC (2010), “Specification for structural steel buildings,” *ANSI/AISC 360-10*, Chicago.

Alizadeh, S., Attari, N.K. and Kazemi, M.T. (2015), “Experimental investigation of RCS connections performance using self-consolidated concrete,” *J. Constr. Steel Res.*, **114**, 204-216.

ASCE Task Committee on Design Criteria for Composite Structures in Steel and Concrete (1994), “Guidelines for design of joints between steel beams and reinforced concrete columns,” *J. Struct. Eng.*, *ASCE*, **120**(8), 2330-2357.

Bugeja, M.N., Bracci, J.M. and Moore Jr, W.P. (2000), “Seismic behavior of composite RCS frame systems,” *J. Struct. Eng.*, **126**(4), 429-436.

Cheng, C.-T. and Chen, C.-C. (2005), “Seismic behavior of steel beam and reinforced concrete column connections,” *J. Constr. Steel Res.*, **61**(5), 587-606.

Deierlein, G.G. (1988), “Design of moment connections for composite framed structures,” Ph. D. Thesis, Univ. of Texas, Austin.

Kanno, R. (1993), “Strength, deformation, and seismic resistance of joints between steel beams and reinforced concrete columns,” Ph. D. Thesis, Cornell Univ.

Kanno, R. and Deierlein, G.G. (2002), “Design model of joints for RCS frames,” *Composite Construction in Steel and Concrete IV*, ASCE, 947-958.

Liang, X. and Parra-Montesinos, G.J. (2004), “Seismic behavior of reinforced concrete column-steel beam subassemblies and frame systems,” *J. Struct. Eng.*, **130**(2), 310-319.

Parra-Montesinos, G.J., Liang, X. and Wight, J.K. (2003), “Towards deformation-based capacity design of RCS beam–column connections,” *Eng. Struct.*, **25**(5), 681-690.

Parra-Montesinos, G.J. and Wight, J.K. (2001), “Modeling shear behavior of hybrid RCS beam-column connections,” *J. Struct. Eng.*, **127**(1), 3-11.

Sheikh, T.M. (1988), “Moment connections between steel beams and concrete columns,” Ph. D. Thesis, Univ. of Texas, Austin.