The 2016 World Congress on
The 2016 Structures Congress (Structures16)
Jeju Island, Korea, August 28-September 1, 2016

Simplified modelling of steel frame connections under cyclic loading

Saher El-Khoriby[1)], *Mohammed A. Sakr[2)], Tarek M. Khalifa[3)] and Mohammed Eladly[4)]

[1), 2), 3), 4)] *Department of Structural Engineering, Faculty of Engineering, Tanta University, Tanta, Egypt*
[2)] *mhsakr010@yahoo.com*

ABSTRACT

The behaviour of steel frame connections has been experimentally and numerically studied in the literature under cyclic loading; however, most of the suggested numerical studies established complicated three-dimensional models. In this paper, firstly, simplified finite element models of steel beam-to-column endplate connections under cyclic loading were developed using three- and two-dimensional shell models. Element types and material constitutive model of cyclic plasticity were described. To simulate the actual behaviour of connection, the interactions between connection components (endplate, column flange and bolts) were accurately modelled. Both nonlinearities of material and geometry were considered. The two proposed finite element models were compared with previously proposed by another researcher three-dimensional solid model, then the three models were verified by typical quasi-static test results for an extended endplate connection, including both failure modes and hysteretic curves. They proved their capability for predicting the actual behaviour of steel connections. In terms of CPU time, the two-dimensional shell model is the most effective among the three models.

1. Introduction

During some earthquakes in the last few years (e.g. Tokyo earthquake in 2011), many steel structures suffered from failure of the welded connections. The need for alternative connections encouraged scholars to carry out more studies in this area.

Presently, the cyclic behaviour of steel frame connections has been investigated by many researchers. Numerous experimental works were performed. (Tsai 1990), (Sumner 2002), (Broderick 2002), (Guo 2006), (Shi 2007) and (Loureiro 2012) studied the cyclic behaviour of steel endplate connections under severe cyclic loading. On the other hand, (Yorgun 2001) tested a number of beam-to-column welded joints.

[1)] Professor
[2)] Associate professor
[3)] Lecturer
[4)] Master's Student

All of the mentioned experimental studies have conducted considerable works on the steel frame connections performance, however, because of difficulties and high cost of carrying out tests (especially in cases of wide parametric studies), the finite element (FE) modelling is openly used at present. Consequently, there is a pressing need for more accurate numerical modelling to undertake parametric analysis.

There were some reports for the numerical simulation of steel frame connections. For example, (Pacurar 2006) used Ls-Dyna explicit nonlinear solver to model a beam to column steel endplate connection with prestressed bolts. An algorithm of finite element model was proposed by (Razavi 2007). (Shi 2008) developed a three-dimensional finite element model to simulate and analyse the mechanical behaviour of different types of beam-to-column endplate connections with pretensioned bolts based on ANSYS. (Eldemerdash 2012) presented three-dimensional finite element models to study the monotonic behaviour of large capacity eight-bolt extended un-stiffened wide endplate steel connections, using ANSYS. The ABAQUS finite-element package was used by (Wheeler 2000) to analyse bolted moment endplate connections joining square and rectangular hollow sections that are subjected to pure bending, using three-dimensional model. (Diacuteaz 2011) developed a three-dimensional ANSYS finite element model of steel beam to column bolted extended endplate connections for use to obtain their rotational behaviour. A finite element simulation is used by (Gerami 2011) to study and compare the cyclic behaviour of fourteen specimens of endplate and T-stub bolted connections by changing the horizontal and vertical arrangement of bolts. (Wang 2013) established a three-dimensional (3D) finite element model of ABAQUS to study the seismic behaviour of steel frame endplate connections subjected to cyclic loadings.

Most of these aforesaid numerical investigations developed three-dimensional models. In terms of time and calculation cost, performing a wide parametric study of connections under cyclic loadings, using 3D model, isn't economic. Therefore, proposing simplified FE models taking into account proper contact relations and nonlinear behaviours, to accurately simulate steel frame connections and predict their hysteretic behaviour, is needful.

The study in this paper aims to establish two simplified models (3D and 2D shell models) capable to simulate the actual cyclic behaviour of steel frame connections. The details of the suggested models (Element types, material cyclic constitutive models and interactions between connections components) were described. The results of the suggested numerical models were compared with experimental data in order to validate their accuracy.

2. Finite Element Analysis
3.

The FE simulation software ABAQUS (Analysis user's manual 2012) was used to establish three models, including 3D solid model, 3D shell model and 2D shell model, able to model the behaviour of steel frame connections accurately. Steel beam, column, endplate, rib stiffeners of endplate, column stiffeners and high strength bolts are the components of endplate connection. A 3D solid FE model of an extended endplate connection is shown in Fig. 1(a), while the interactions between the connection components are illustrated in Fig. Fig. 2.

Based on (Wang 2013)'s numerical work, a 3D solid model was established, while the two other models were proposed in this paper. All parts of the two proposed models are presented in details as follows.

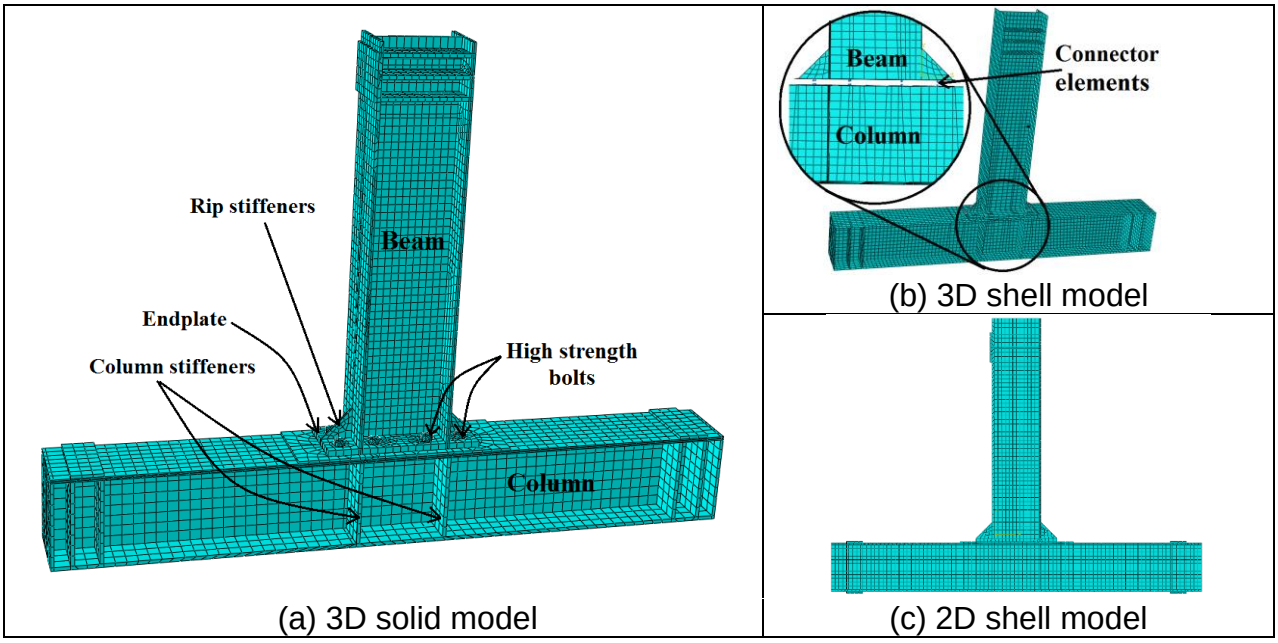

(a) 3D solid model (b) 3D shell model (c) 2D shell model

Fig. 1 Different FE models of an extended endplate connection.

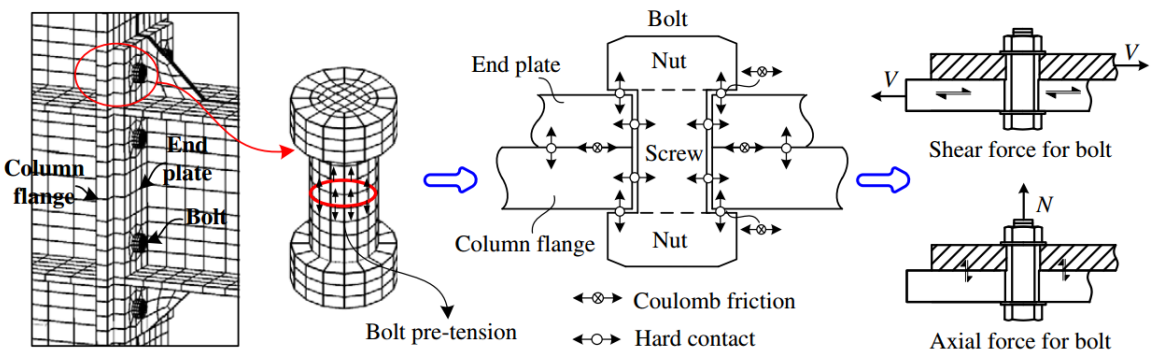

Fig. 2 Interactions between connection components (Wang 2013).

2.1 Element types, meshes and contact modelling

2.1.1 3D model using shell element

A 4-node doubly curved thin or thick shell, reduced integration, hourglass control, finite membrane strains element (S4R) was adopted for H-shaped steel beams and columns.

In the 3D shell model, to represent the actual behaviour of bolts, rigid plastic CARTESIAN elements from the ABAQUS library (Analysis user's manual 2012) were used, as connector elements between the nodes of endplate and column flange, as shown in Fig. 1(b).

Connector behaviours can be defined in any connector with available components of

relative motion. Available components of relative motion are displacements and rotations that are not kinematically constrained. Multiple connector behaviours can be defined in the connector section (Analysis user's manual 2012).

To model a Cartesian connector that represents a high-strength bolt, various connector behaviours were defined. ‘Plasticity and elasticity’ behaviours were defined in the bolt axial force direction. In the other two directions, the ‘bolt shear force directions’, the defined behaviours were ‘plasticity, elasticity and stop’.

There is also a contact between the surfaces of endplate and column flange. Contact properties of contact surfaces comprise two parts: tangent interaction and normal interaction. “Hard contact” was used for normal interaction. It signifies that no penetration is allowed and no tensile forces will be transmitted. Furthermore, there is no limit to the magnitude of contact pressure that can be transmitted when the surfaces are in contact. For the tangent interaction, the ‘Coulomb friction’ has been used, which allows some relative motion of the surfaces (an ‘elastic slip’) when they should be sticking. While the surfaces are sticking (i.e. $\bar{\tau} < \bar{\tau}_{crit}$), where $\bar{\tau}$ is the calculated shear stress and $\bar{\tau}_{crit}$ is the maximum transmitted shear stress, the magnitude of sliding is limited to this elastic slip (Analysis user's manual 2012). The friction coefficients are selected according to test results.

2.1.2 2D model using plane stress shell element

A 4-node bilinear plane stress quadrilateral element (CPS4) was adopted for H-shaped steel beams and columns.

Rigid plastic CARTESIAN elements, as well as interaction between column flange and endplate, were defined as described in 3D shell model. Fig. 1(c) shows a 2D shell FE model of an extended endplate connection.

2.2 Material modelling

When steel elements are subjected to cyclic loadings, a steel cyclic constitutive model is needed, which is different from the monotonic model. Presently, steel stress–strain relationship is ordinarily defined as multi-linear forms. Those models, however, cannot give satisfying results under cyclic loading (Shi 2011). Based on (Wang 2013)’s numerical modelling of steel connections, it is possible to conclude that the results calculated from the cyclic model were in better agreement with experiments for both loading and reloading processes. The cyclic model well predicted the hysteretic behaviour (Wang 2013).

Regarding the cyclic tests of steel which were performed by (Shi 2011), the used hardening for steel is a combined one, consisting of both isotropic hardening and kinematic hardening. Based on plastoelasticity, (Chaboche 1986,1989) proposed a cyclic combined model. In ABAQUS, this model can be implemented as a plastic constitutive model, containing a nonlinear isotropic hardening component and a kinematic hardening component (Analysis user's manual 2012).

4. Verification of numerical analysis

In order to verify the capability of the suggested finite element models (3D and 2D shell models) to model steel beam-to-column bolted connections accurately, the typical quasi-static cyclic tests of steel endplate connections, which performed by (Shi 2007), was selected.

3.1 Tests of Shi et al.

(Shi 2007) tested a series of eight full-scale structural steel beam-to-column endplate moment connection specimens under cyclic loads. The parameters investigated were endplate thickness, bolt diameter, endplate extended stiffener, column stiffener, type of flush and extended endplate. A typical extended endplate connection used for tests is shown in

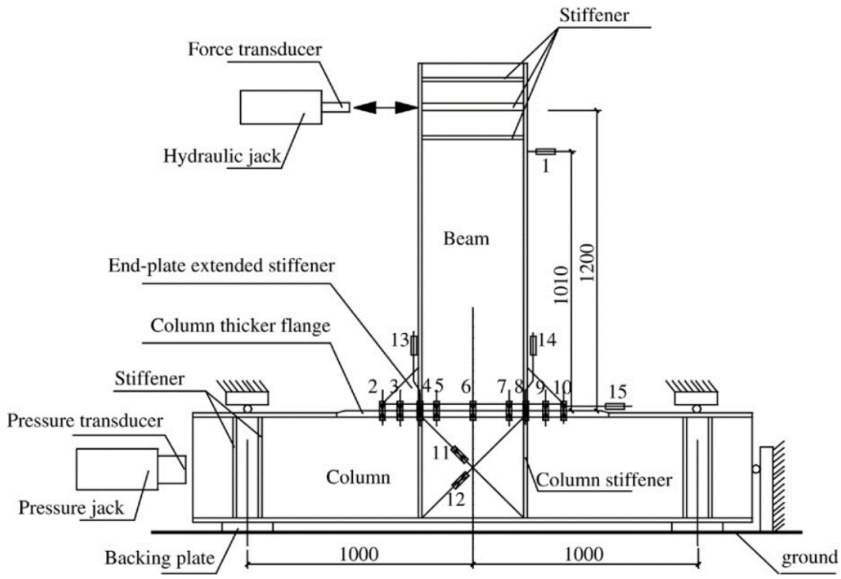

(a) Test specimen and loading arrangement

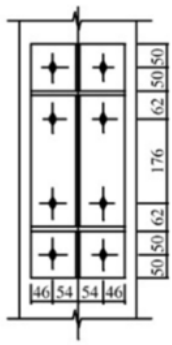

(b) JD2 details

Fig. 3(a). The out-of-plane deformations of the specimens were restrained during tests. These eight specimens are all beam-to-column connections that originated from typical multi-storey steel frames. Specimen (JD2) was selected to be modelled using the three previously mentioned models (three-dimensional solid model established by (Wang 2013) and three- and two-dimensional shell models) to verify their accuracy. The details of JD2 specimen are shown in

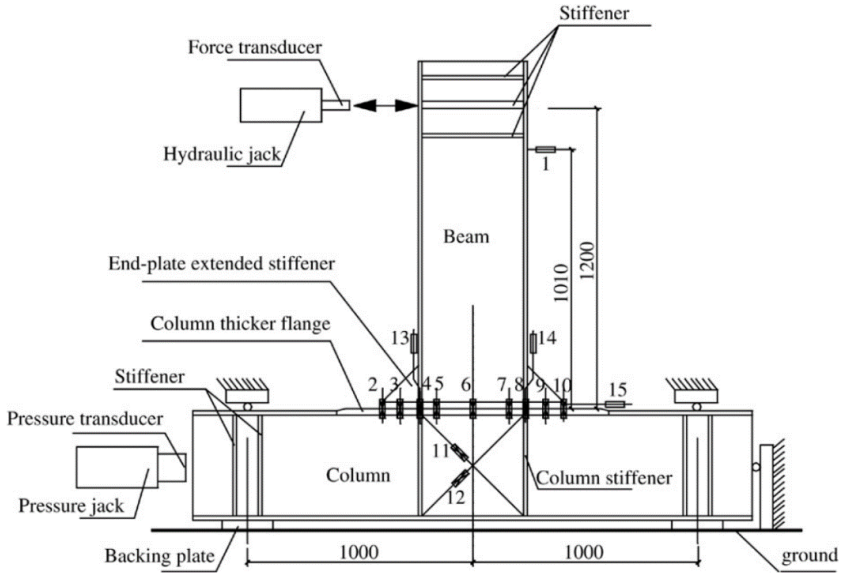

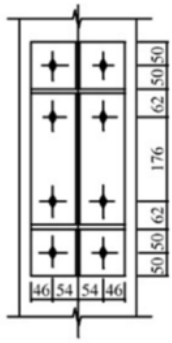

(a) Test specimen and loading arrangement (b) JD2 details

Fig. 3(b).

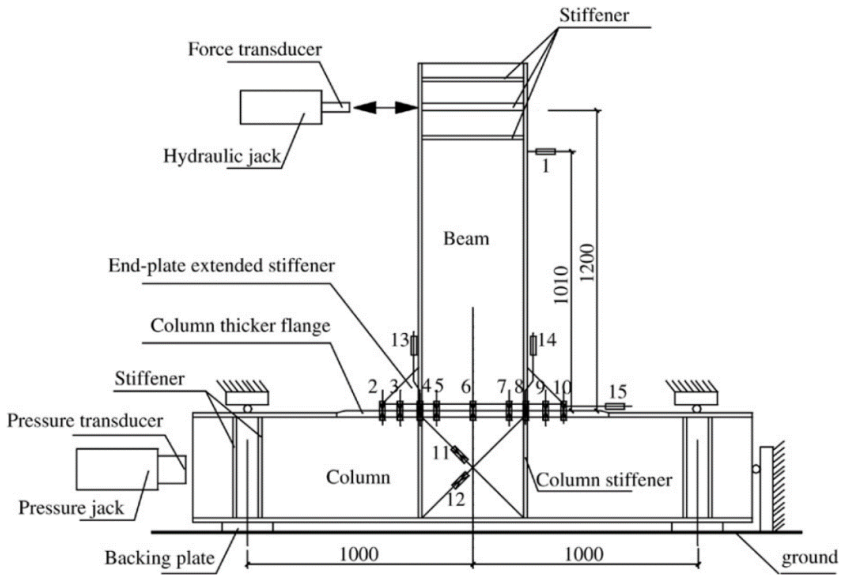

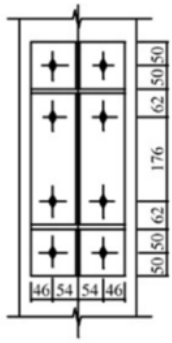

(a) Test specimen and loading arrangement (b) JD2 details

Fig. 3 Test specimen, loading arrangement and connection details (Shi 2007).

The depth, web thickness and flange thickness of columns and beams are 300 mm, 8 mm and 12 mm, and the column and beam width are 250 mm and 200 mm respectively. The thickness of the column flange is the same as the endplate within the range of 100 mm above and below the extension edge of the endplate. The thickness of the column stiffener and endplate extended stiffener is 12 mm and 10 mm respectively. The specimens tested in Shi el al. tests were fabricated from Q345B steel. According to (Shi 2011)'s models, the parameters of steel under cyclic loading are shown in

Table 1. Pre-tension force of bolts was imposed first with a value of 199 kN for specimen (JD2). The grade of the bolts was 10.9. According to (Shi 2008)'s numerical simulation results, the coefficient of friction between steel surfaces was considered as 0.44. The cyclic loading procedure was a load/displacement control method.

Table 1 Calibration parameters of steel (Wang 2013).

$\sigma\|_0$ (N/mm^2)	Q_∞ (N/mm^2)	b	C_1 (N/mm^2)	γ_1	C_2 (N/mm^2)	γ_2	C_3 (N/mm^2)	γ_3	C_4 (N/mm^2)	γ_4
363.3	21	1.2	7993	175	6773	116	2854	34	1450	29

3.2 Comparison of tests and numerical analysis

From Fig. 4, the three finite element models accurately simulated the hysteretic behaviour of the extended endplate connection. It was observed that slight pinching phenomenon of hysteretic curve has occurred after the unloading process. From comparative curves, the three numerical methods simulated this phenomenon well.

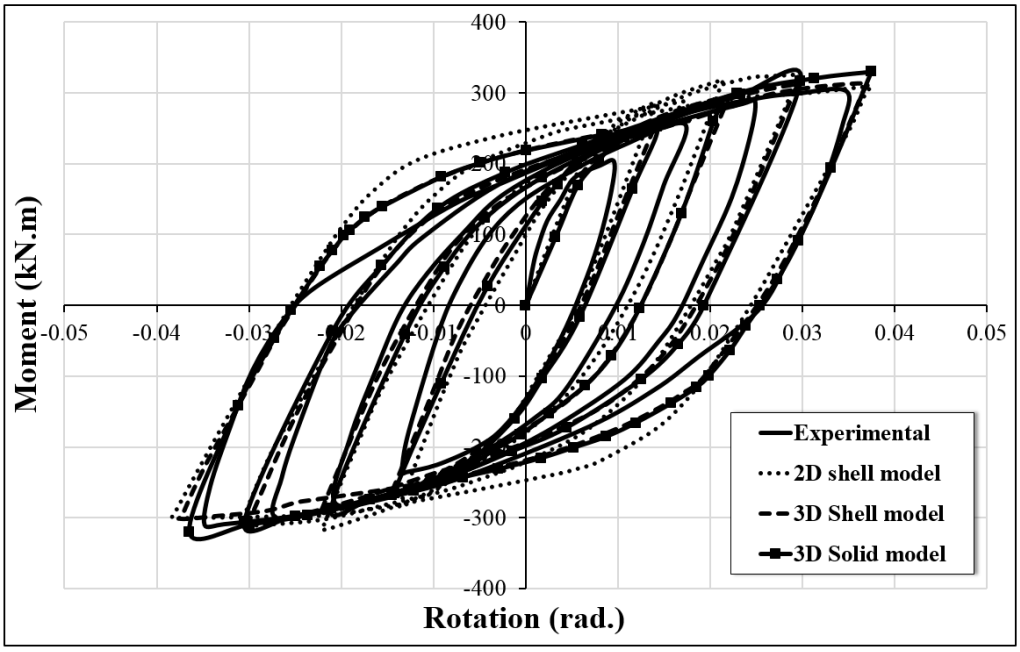

Fig. 4 Comparison of measured and predicted moment–rotation hysteretic curves for extended endplate connection.

The carrying capacity of the JD2 specimen was predicted. Comparison of experimental and numerical results is shown in The errors in predicting the maximum capacity were less than 2% for the three models.

Table 2. The errors in predicting the maximum capacity were less than 2% for the three models.

Table 2 Ultimate moment comparison of the three FE models and test results.

	Test	3D solid model (Wang 2013)	3D Shell model	2D Shell model
M_{max} (kN.m)	322	327.8	316	326.2

3.3 Comparison of the three models CPU time

Table 3 illustrates a comparison of the CPU time of the three models for an endplate frame connection. It shows a great difference in the CPU time between the three models. To model an extended endplate connection under cyclic loading, the 2D shell model consumed about 25% of the 3D shell model CPU time and about 2.3% of the 3D solid model CPU time, which indicated that the 2D shell model is the most effective among the three models.

Table 3 CPU time comparison of the three FE models.

	3D solid model	3D Shell model	2D Shell model
CPU Time (minutes)	504	48	12

5. Conclusions

Three models (3D solid, 3D shell and 2D shell models) were established to simulate the cyclic behaviour of steel frame connections. Based on previous numerical work, the 3D solid model was established, while the two other models were proposed in this paper. The two proposed models were verified by the results of steel frame connections typical quasi-static tests. The proposed 3D and 2D shell models evidenced their capability to predict accurately the cyclic behaviour of steel bolted connections, but the 2D shell model was the most effective among the three studied models. It consumed about 25% of the 3D shell model CPU time and almost 2.3% of the 3D solid model CPU time. This simplified model provided a strong tool for studying the connections behaviours.

References

ABAQUS. Analysis user's manual. (2012), Version 6.12. USA: ABAQUS, Inc., Dassault Systèmes.

Broderick, B.M. and Thomson, A.W. (2002), “The response of flush endplate joints under earthquake loading”, *J Constr Steel Res,* **58**(9), 1161–1175.

Chaboche, J.L. (1986), “Time independent constitutive theories for cyclic plasticity”, *Int J Plast,* **2**(2), 149–188.

Chaboche, J.L. (1989), “Constitutive equations for cyclic plasticity and cyclic viscoplasticity”, *Int J Plast*, **5**(3), 247–302.

Diacuteaz, C., Victoria, M. and Martiacute, P. (2011), “FE model of beam-to-column extended endplate joints”, *J Constr Steel Res,* **67**(10), 1578–90.

Eldemerdash, M., Abu-Lebdeh, T. and Al Nasra M. (2012), "Finite element analysis of large capacity endplate steel connections", *J Comput Sci,* **8**(4), 482–493**.**

Gerami, M., Saberi, H. and Saberi V. (2011), "Cyclic behavior of bolted connections with different arrangement of bolts", *J Constr Steel Res*, **67**(4), 690–705**.**

Guo, B., Gu, Q. and Liu, F. (2006), "Experimental behavior of stiffened and un-stiffened endplate connections under cyclic loading", *J Struct Eng, ASCE,* **132**(9), 1352–1357.

Loureiro, A., Moreno, A. and Gutierrez, R. (2012), "Experimental and numerical analysis of three-dimensional semi-rigid steel joints under non-proportional loading", *Eng Struct,* **38**, 68–77.

Pacurar, V., Petrina, M. and Lupea, I. (2006), "Numerical analysis of the behavior of semi rigid beam to column connections of steel frames", *International Conference on Metal Structures, Poiana Brasov, ROMANIA*.

Razavi, H., Abolmaali, A. and Ghassemieh, M. (2007), "Invisible elastic bolt model concept for finite element analysis of bolted connections", *J Constr Steel Res,* **63**(5), 647–657.

Shi, G., Shi, Y.J. and Wang, Y.Q. (2007), "Behaviour of endplate moment connections under earthquake loading", *Eng Struct*, **29**(5), 703–716.

Shi, G., Shi, Y.J. and Wang, Y.Q. (2008), "Numerical simulation of steel pre-tensioned bolted endplate connections of different types and details", *Eng Struct,* **30**(10), 2677–86**.**

Shi, Y.J., Wang, M. and Wang, Y.Q. (2011), "Experimental and constitutive model study of structural steel under cyclic loading", *J Constr Steel Res,* **67**(8), 1185–97**.**

Sumner, E.A. and Murray, T.M. (2002), "Behavior of extended endplate moment connections subject to cyclic loading", *J Struct Eng, ASCE,* **128**(4), 501–508.

Tsai, K.C. and Popov, E.P. (1990), "Cyclic behavior of end-plate moment connections", *J Struct Eng, ASCE,* **116**(11), 2917–2930.

Wang, M., Shi, Y.J., Wang, Y.Q. and Shi, G. (2013), "Numerical study on seismic behaviors of steel frame endplate connections", *J Constr Steel Res*, **90**, 140–152

Wheeler, A.T., Clarke, M.J. and Hancock G.J. (2000), "FE modeling of four-bolt, tubular moment endplate connections", *J Struct Eng, ASCE*, **126**(7), 816–22**.**

Yorgun, C. and Bayramoglu, G. (2001), "Cyclic tests for welded-plate sections with end-plate connections", *J Constr Steel Res*, **57**(12), 1309–1320.